Oxford Cambridge and RSA

Friday 14 June 2024 – Afternoon

A Level Further Mathematics A

Y543/01 Mechanics

Time allowed: 1 hour 30 minutes

You must have:
- the Printed Answer Booklet
- the Formulae Booklet for A Level Further Mathematics A
- a scientific or graphical calculator

QP

INSTRUCTIONS
- Use black ink. You can use an HB pencil, but only for graphs and diagrams.
- Write your answer to each question in the space provided in the **Printed Answer Booklet**. If you need extra space use the lined pages at the end of the Printed Answer Booklet. The question numbers must be clearly shown.
- Fill in the boxes on the front of the Printed Answer Booklet.
- Answer **all** the questions.
- Where appropriate, your answer should be supported with working. Marks might be given for using a correct method, even if your answer is wrong.
- Give non-exact numerical answers correct to **3** significant figures unless a different degree of accuracy is specified in the question.
- The acceleration due to gravity is denoted by $g\,\mathrm{m\,s^{-2}}$. When a numerical value is needed use $g = 9.8$ unless a different value is specified in the question.
- Do **not** send this Question Paper for marking. Keep in the centre or recycle it.

INFORMATION
- The total mark for this paper is **75**.
- The marks for each question are shown in brackets **[ ]**.
- This document has **8** pages.

ADVICE
- Read each question carefully before you start your answer.

© OCR 2024 [R/508/5512]
DC (PQ/CGW) 340494/2
OCR is an exempt Charity

1 A particle P of mass 12.5 kg is moving on a smooth horizontal plane when it collides obliquely with a fixed vertical wall.

At the instant before the collision, the velocity of P is $-5\mathbf{i}+12\mathbf{j}\ \mathrm{m\,s^{-1}}$.

At the instant after the collision, the velocity of P is $\mathbf{i}+4\mathbf{j}\ \mathrm{m\,s^{-1}}$.

(a) Find the magnitude of the momentum of P **before** the collision. **[2]**

(b) Find, in vector form, the impulse that the wall exerts on P. **[2]**

(c) State, in vector form, the impulse that P exerts on the wall. **[1]**

(d) Find in either order.

- The magnitude of the impulse that the wall exerts on P.
- The angle between $\mathbf{i}$ and the impulse that the wall exerts on P. **[3]**

2 One end of a light elastic string of natural length 1.4 m and modulus of elasticity 20 N is attached to a small object B of mass 2.5 kg. The other end of the string is attached to a fixed point O.

Object B is projected vertically upwards from O with a speed of $u\ \mathrm{m\,s^{-1}}$.

(a) State **one** assumption required to model the motion of B. **[1]**

The greatest height above O achieved by B is 8.1 m.

(b) Determine the value of u. **[4]**

3 The mass of a truck is 6000 kg and the maximum power that its engine can generate is 90 kW. In a model of the motion of the truck it is assumed that while it is moving the total resistance to its motion is constant.

At first the truck is driven along a straight horizontal road. The greatest constant speed that it can be driven at when it is using maximum power is $25\ \mathrm{m\,s^{-1}}$.

(a) Find the value of the resistance to motion. **[2]**

The truck is being driven along the horizontal road with the engine working at 60 kW.

(b) Find the acceleration of the truck at the instant when its speed is $10\ \mathrm{m\,s^{-1}}$. **[2]**

The truck is now driven **down** a straight road which is inclined at an angle θ below the horizontal. The greatest constant speed that the truck can be driven at maximum power is $40\ \mathrm{m\,s^{-1}}$.

(c) Determine the value of θ. **[3]**

4 A particle, P, of mass 6 kg is attached to one end of a light inextensible rod of length 2.4 m. The other end of the rod is smoothly hinged at a fixed point O and the rod is free to rotate in any direction.

Initially, P is at rest, vertically below O, when it is projected horizontally with a speed of $12\,\text{m}\,\text{s}^{-1}$. It subsequently describes complete vertical circles with O as the centre.

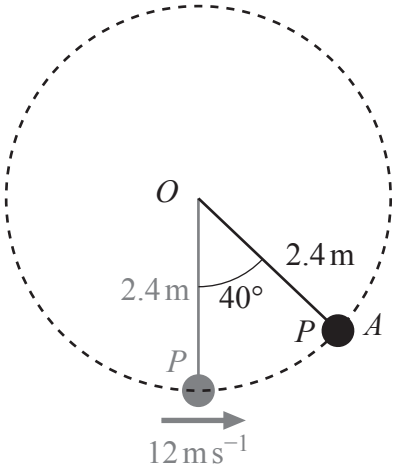

The angle that the rod makes with the downward vertical through O at each instant is denoted by θ and A is the point which P passes through where $\theta = 40°$ (see diagram).

(a) Find the tangential acceleration of P at A, stating its direction. **[2]**

(b) Determine the radial acceleration of P at A, stating its direction. **[6]**

(c) Find the magnitude of the force in the rod when P is at A, stating whether the rod is in tension or compression. **[2]**

The motion is now stopped when P is at A, and P is then projected in such a way that it now describes horizontal circles at a constant speed with $\theta = 40°$ (see diagram).

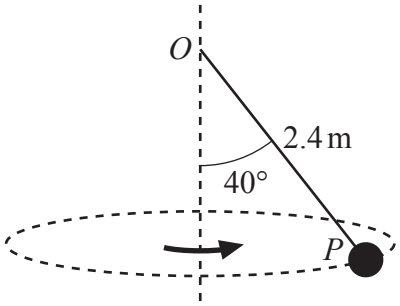

(d) Find the speed of P. **[4]**

(e) Explain why, wherever P's motion is initiated from and whatever its initial velocity, it is **not** possible for P to describe horizontal circles at constant speed with $\theta = 90°$. **[1]**

5 In this question you may assume that if x and y are any physical quantities then $\left[\frac{\mathrm{d}y}{\mathrm{d}x}\right] = \left[\frac{y}{x}\right]$.

A machine drives a piston of mass m into a vertical cylinder. The equation below is suggested to model the power developed by the machine, P, while it is not doing any other external work.

$$P = k_1 mv\frac{\mathrm{d}v}{\mathrm{d}t} + k_2 mgv + k_3 E$$

in which

- v is the velocity of the piston at a given time,
- g is the acceleration due to gravity,
- E is the **rate** at which heat energy is lost to the surroundings,
- k_1, k_2 and k_3 are dimensionless constants.

Determine whether the equation is dimensionally consistent. Show **all** the steps in your argument. **[6]**

6 Two identical spheres, A and B, each of mass m kg, are moving directly towards each other along the same straight line on a smooth horizontal surface until they collide. Just before they collide, the speeds of A and B are $20\,\mathrm{m\,s^{-1}}$ and $10\,\mathrm{m\,s^{-1}}$ respectively. The coefficient of restitution between A and B is e.

(a) By finding, in terms of e, an expression for the velocity of B after the collision, show that the direction of motion of B is reversed by the collision. **[5]**

After the collision between A and B, which is **not** perfectly elastic, B goes on to collide directly with a fixed, vertical wall. The coefficient of restitution between B and the wall is $\frac{2}{5}e$. After the collision between B and the wall, there are no further collisions between A and B.

(b) Determine the range of possible values of e. **[7]**

7 A body B of mass 1.5 kg is moving along the x-axis. At the instant that it is at the origin, O, its velocity is $u\,\mathrm{m\,s^{-1}}$ in the positive x-direction.

At any instant, the resistance to the motion of B is modelled as being directly proportional to v^2 where $v\,\mathrm{m\,s^{-1}}$ is the velocity of B at that instant. The resistance to motion is the only horizontal force acting on B.

At an instant when B's velocity is $2\,\mathrm{m\,s^{-1}}$, the resistance to its motion is 24 N.

(a) Show that B's motion can be modelled by the differential equation $\frac{1}{v}\frac{\mathrm{d}v}{\mathrm{d}x} = -4$. **[3]**

(b) (i) Solve the differential equation in part **(a)** to find the particular solution for v in terms of x and u. **[4]**

(ii) By considering the behaviour of v as $x \longrightarrow \infty$ describe **one** feature of the model that is not realistic. **[1]**

At the instant when B reaches the point A, where $x = X$, its speed is $V\,\mathrm{m\,s^{-1}}$. The work done by the resistance as B moves from O to A is denoted by W J.

(c) (i) Use the formula $W = \int F\,\mathrm{d}x$ to determine an expression for W in terms of X and u. **[3]**

(ii) Explain the relevance of the sign of your answer in part **(c)(i)**. **[1]**

(iii) By writing your answer to part **(c)(i)** in terms of V and u show how the quantity W relates to the energy of B. **[2]**

8 A shape, S, is formed by attaching a particle of mass $2m$ kg to the vertex of a uniform solid cone of mass $8m$ kg. The height of the cone is h m and the radius of the base of the cone is 1.1 m.

(a) Explain why the centre of mass of S must lie on the central axis of the cone. **[1]**

Two strings are attached to S, one at the vertex of the cone and one at A which is a point on the edge of the base of S. The other ends of the strings are attached to a horizontal ceiling in such a way that the strings are both vertical. The string attached to S at A is inextensible and has length 1.6 m. The string attached to S at the vertex is elastic with modulus of elasticity $8mg$ N.

Shape S is in equilibrium with its axis horizontal (see diagram).

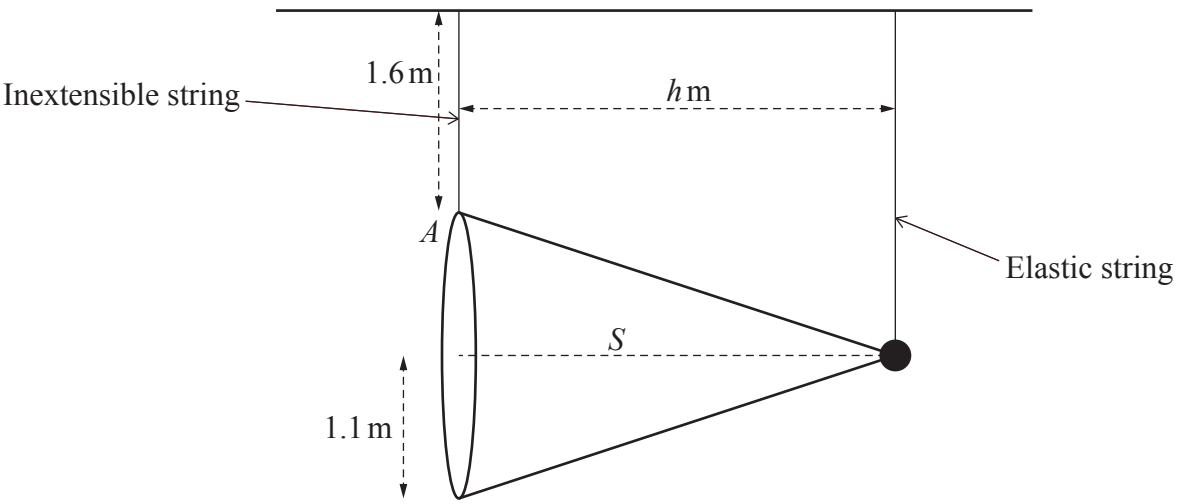

(b) Determine the natural length of the elastic string. **[7]**

END OF QUESTION PAPER

BLANK PAGE

OCR
Oxford Cambridge and RSA

Copyright Information

OCR is committed to seeking permission to reproduce all third-party content that it uses in its assessment materials. OCR has attempted to identify and contact all copyright holders whose work is used in this paper. To avoid the issue of disclosure of answer-related information to candidates, all copyright acknowledgements are reproduced in the OCR Copyright Acknowledgements Booklet. This is produced for each series of examinations and is freely available to download from our public website (www.ocr.org.uk) after the live examination series.

If OCR has unwittingly failed to correctly acknowledge or clear any third-party content in this assessment material, OCR will be happy to correct its mistake at the earliest possible opportunity.

For queries or further information please contact The OCR Copyright Team, The Triangle Building, Shaftesbury Road, Cambridge CB2 8EA.

OCR is part of Cambridge University Press & Assessment, which is itself a department of the University of Cambridge.

© OCR 2024